CONSTRUCTION METHODS

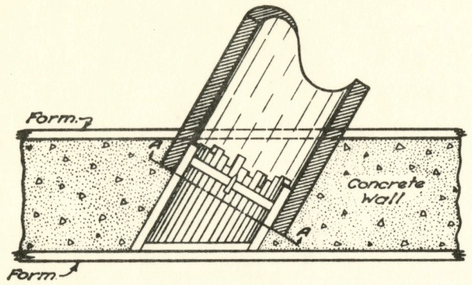

SECTION B-B
Through wall and pipe.

SECTION A-A

BARRELLING CONCRETE WALL

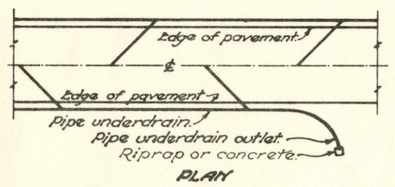

PLAN

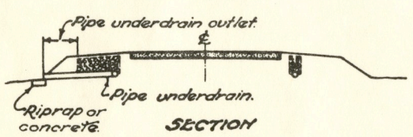

SECTION

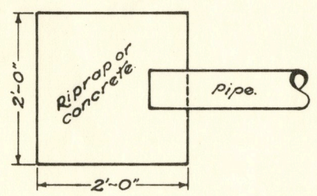

PLAN

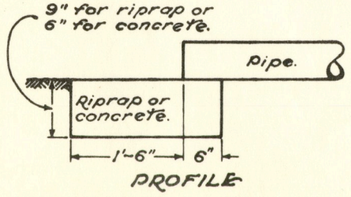

PROFILE

PIPE UNDERDRAIN OUTLET

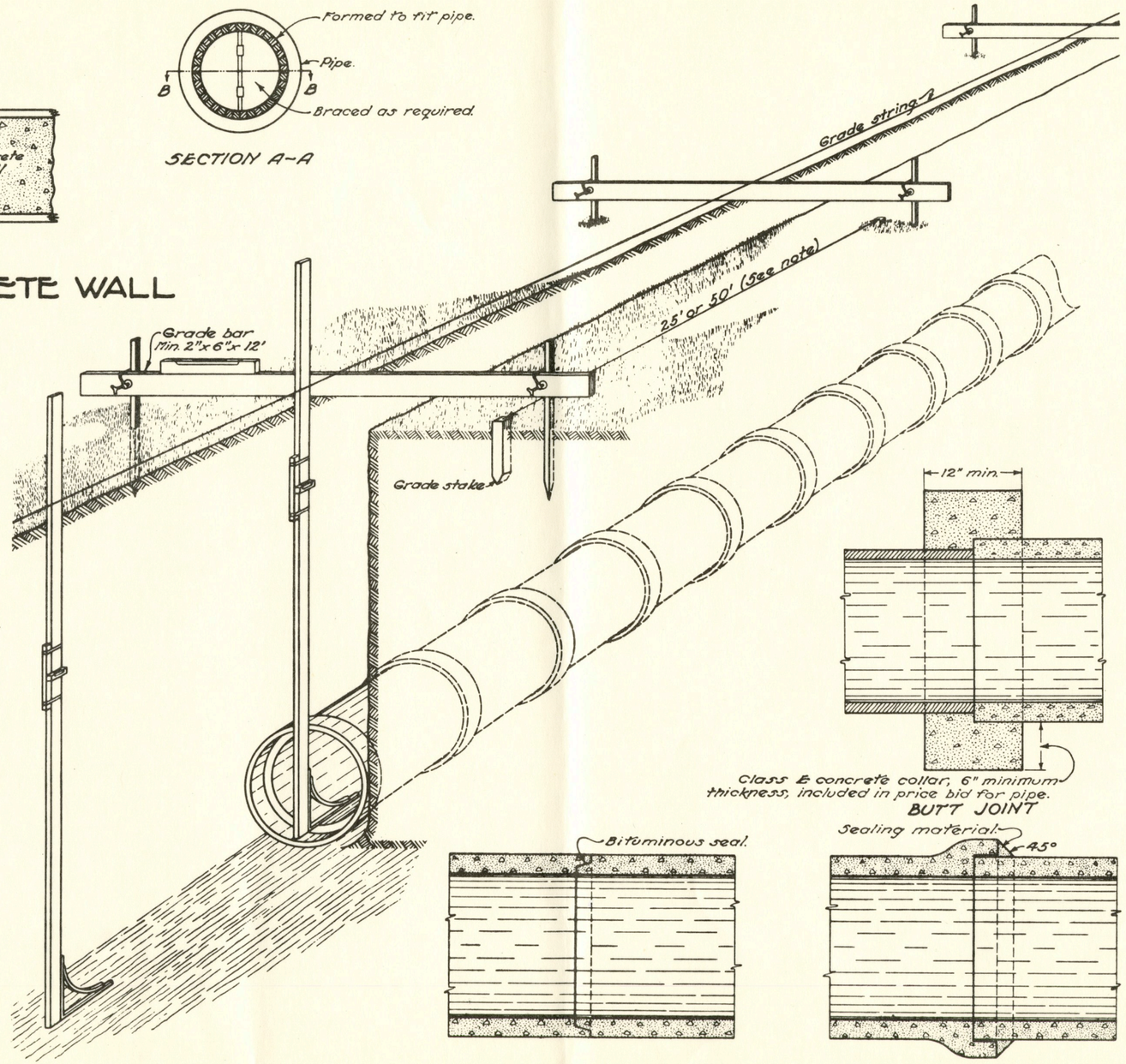

LAYING PIPE

SEALED PIPE JOINTS

NOTES

BARRELLING OUT CONCRETE WALL:—When necessary that the pipe be barrelled out to the required lengths, it shall be done according to the details shown hereon.

GRADE STAKES shall be set at the following intervals:— For grades less than 0.70% – 25 feet. For grades of 0.70% and over – 50 feet.

GRADE POLE shall be a straight pole dressed with corners rounded, size depending on the length but approximately 1" x 2". The pole shall be equipped with a metal bracket on the bottom with a projecting length of 12". Notches shall be cut on the pole for the depth of the flow line below the grade string and for the depth of trench. A spirit level shall be used on the pole to determine when the pole is vertical.

PIPE JOINTS:—When the construction item calls for sealed joints they shall conform to the details shown hereon and to the appropriate sections of the Construction and Material Specifications.

Where called for on the plans, in the proposal or the specifications, pipe of the type and size specified, shall be encased with a minimum of five inches of Class "E" concrete meeting the requirements of Item 5-1. Payment for furnishing and placing the concrete, and for any additional excavation required, shall be included in the price bid per linear foot of the pertinent pipe item.

PIPE UNDERDRAIN OUTLET: Place grouted riprap 9" thick or Class "E" plain concrete slab 6" thick at the outlet end of underdrain pipe as shown. Cost of furnishing and placing riprap or concrete slab shall be included in price bid per lineal foot of outlet pipe.

BUREAU OF LOCATION AND DESIGN
OHIO DEPARTMENT OF HIGHWAYS

DRAINS AND SEWERS

DATE 11-15-60

STANDARD CONSTRUCTION DRAWING I-1

APPROVED [signature] ENGR. L. & D.

STANDARD No. 1 SIDE DITCH INLETS

CONSTRUCTED ON PIPE LESS THAN 12" DIAMETER

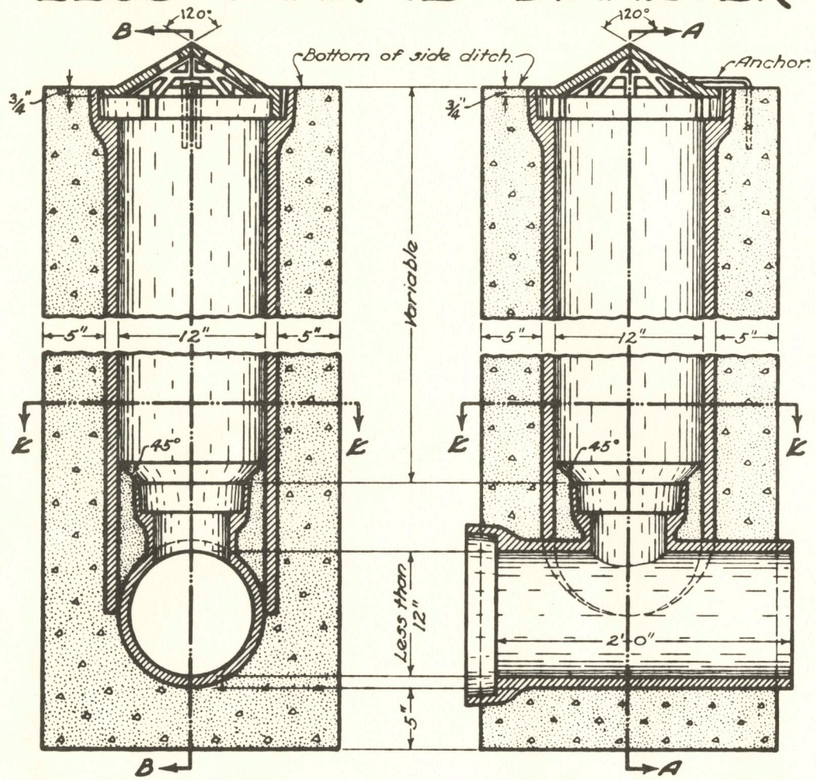

SECTION A-A

SECTION B-B

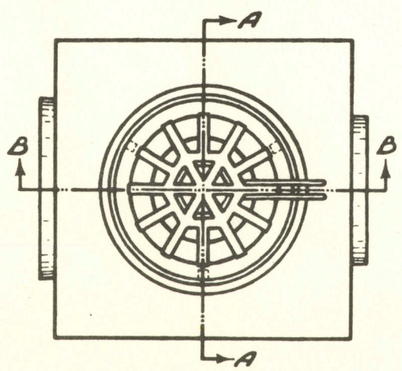

PLAN

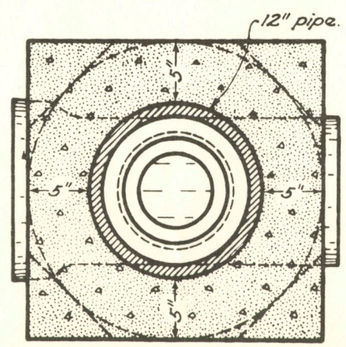

SECTION E-E

CONSTRUCTED ON PIPE 12" DIAMETER OR OVER

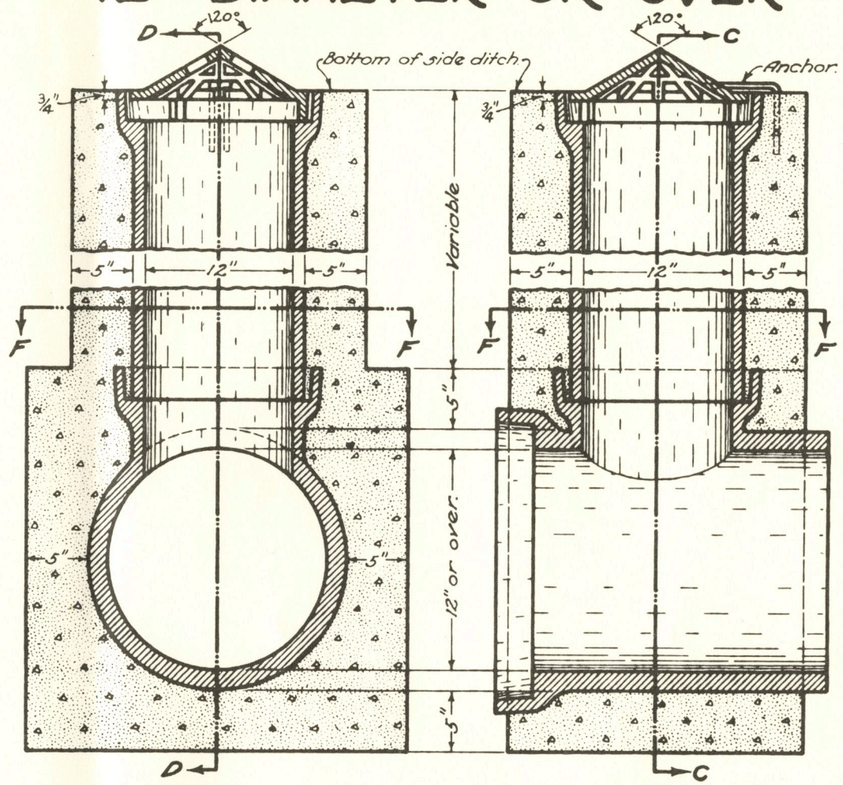

SECTION C-C

SECTION D-D

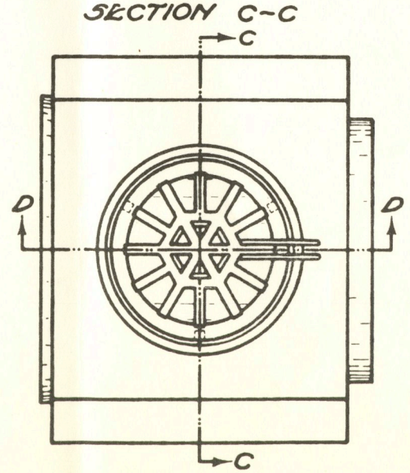

PLAN

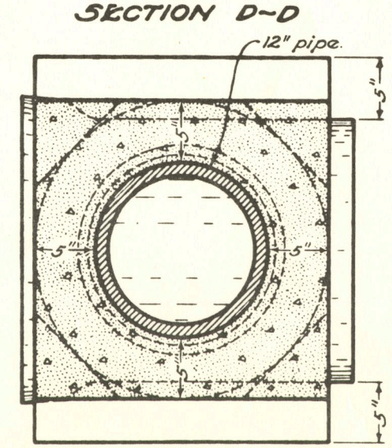

SECTION F-F

NOTES

CASTINGS shall meet the requirements of 604. The design shall be essentially the same and equally as strong as the one shown hereon. Weight, minimum, 22 pounds.

ANCHOR for casting to be a 3/8 in. rod, 2 ft. long, bent around grate as shown and anchored into concrete casing.

CONCRETE casing for riser may be square, round or hexagonal in shape, and shall be Class "C."

RISER PIPE in all cases shall be 12 in. in diameter regardless of size of carrying line.

TEE:- Where carrying line is not continuous through inlet the upstream opening of the tee shall be properly plugged using approved stopper and sealed joint.

BUREAU OF LOCATION AND DESIGN
OHIO DEPARTMENT OF HIGHWAYS

DATE 6-1-'65

SIDE DITCH INLETS

STANDARD CONSTRUCTION DRAWING I-1

APPROVED R. R. Rutz ENGR., L. & D.

STANDARD No. 1 SIDE DITCH INLETS

CONSTRUCTED ON PIPE LESS THAN 12" DIAMETER

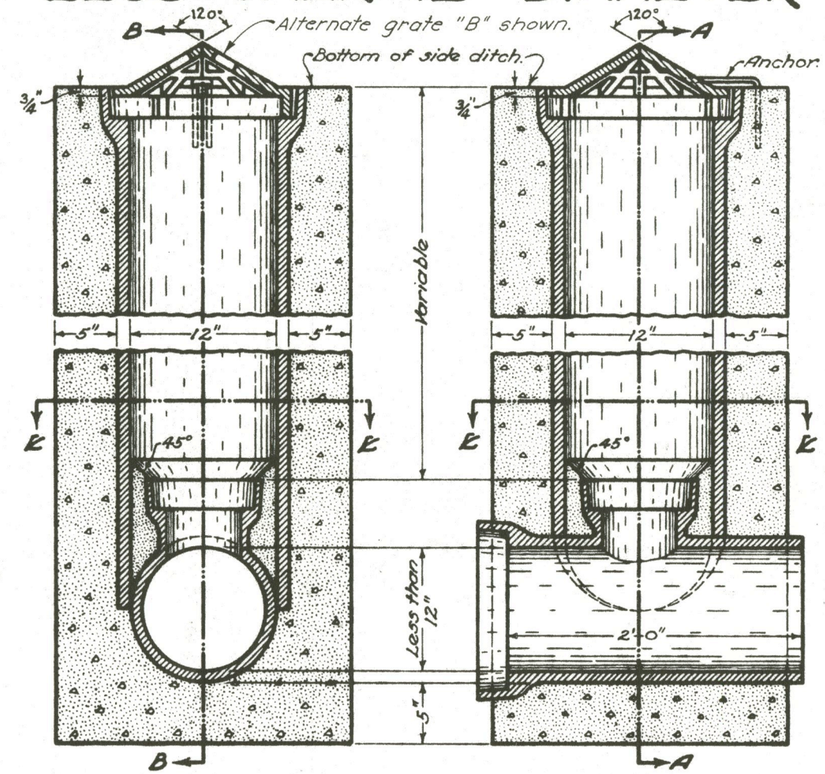

SECTION A-A

SECTION B-B

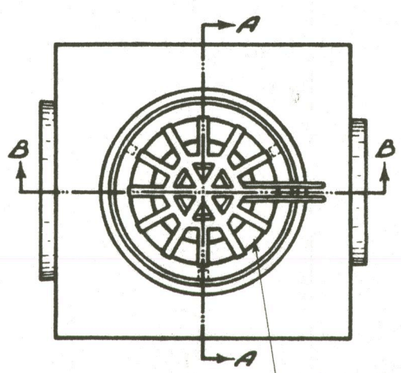

PLAN

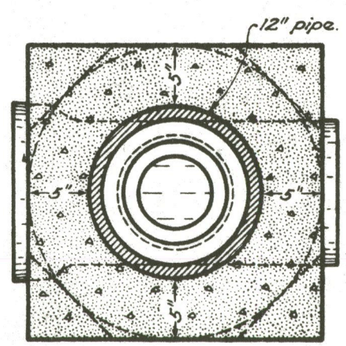

SECTION E-E

CONSTRUCTED ON PIPE 12" DIAMETER OR OVER

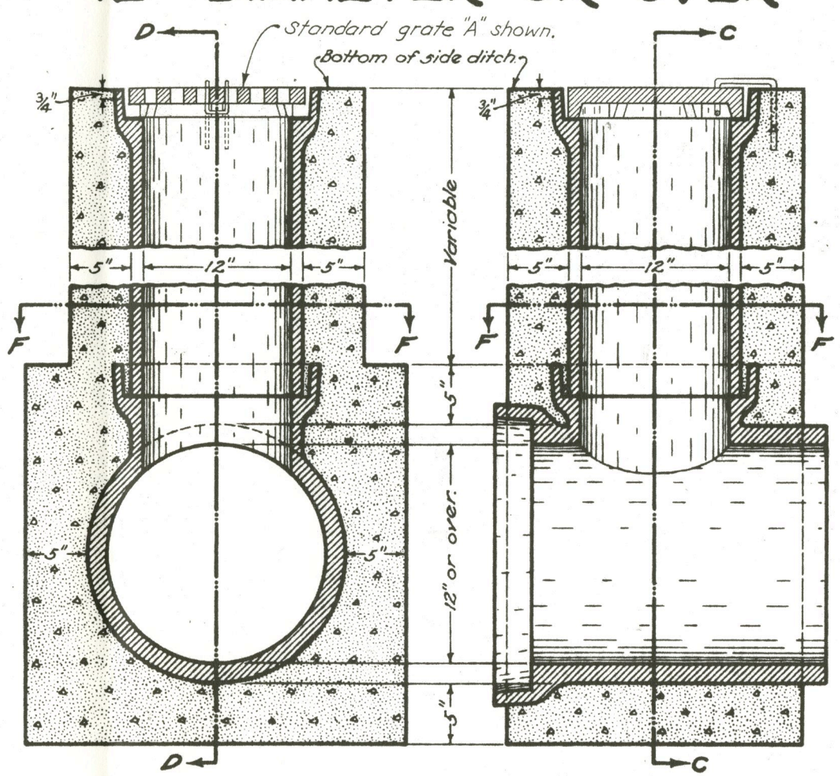

SECTION C-C

SECTION D-D

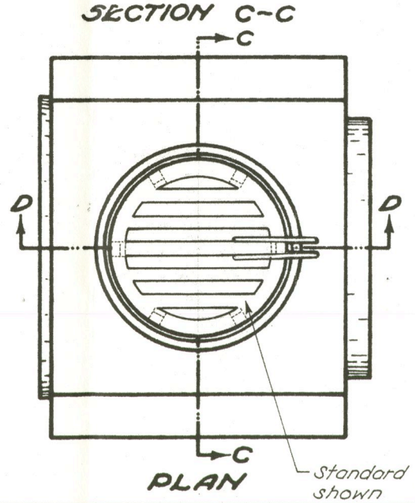

PLAN

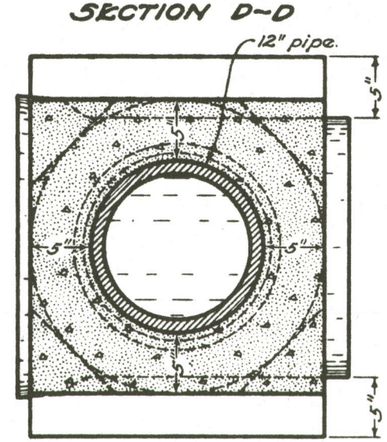

SECTION F-F

CASTINGS shall meet the requirements of 604. The design shall be essentially the same and equally as strong as the one shown hereon. Minimum weight shall be 20 pounds for alternate grate "B" and 30 pounds for standard grate "A".

ANCHOR for casting to be a 3/8 in. rod, 2 ft. long, bent around grate as shown and anchored into concrete casing.

CONCRETE casing for riser may be square, round or hexagonal in shape, and shall be Class "C".

RISER PIPE in all cases shall be 12 in. in diameter regardless of size of sewer line.

TEE:- Where sewer line is not continuous through inlet the upstream opening of the tee shall be properly plugged using preformed stopper and sealed joint.

RISER AND TEE shall be constructed of standard strength vitrified clay pipe or non-reinforced concrete pipe having bell and spigot ends.

STANDARD GRATE "A" shall be provided unless the plans specifically call for Grate "B".

BUREAU OF LOCATION AND DESIGN
OHIO DEPARTMENT OF TRANSPORTATION

SIDE DITCH INLETS

DATE 6-1-'65 12-18-84

STANDARD CONSTRUCTION DRAWING I-1

APPROVED E. L. Vergah ENGR. L. & D.